TECHNICAL
EDUCATION
ACADEMY

School of Engineering

COURSE PROGRAMME

000601

VEND009 - Flowserve Centrifugal Pumps

The course outlined in this program focuses on the fundamentals of centrifugal pump operation and mechanical seals.

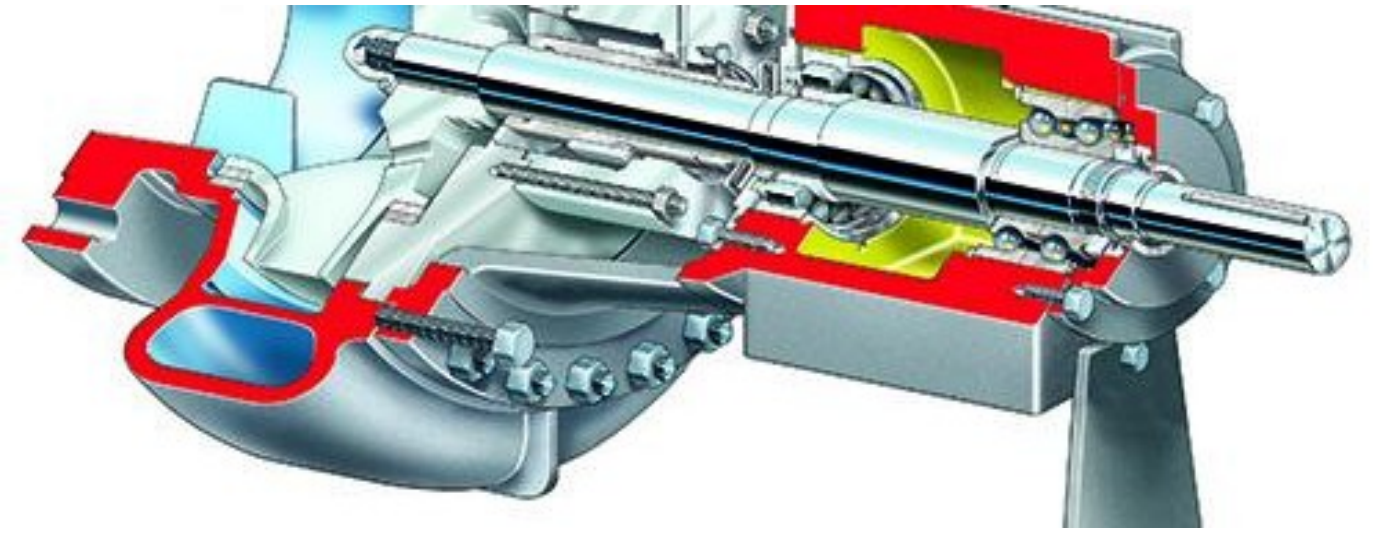

Learn from the Best in the Business!

Course overview

Intermediate level

Why take this course

The course outlined in this program focuses on the fundamentals of centrifugal pump operation and mechanical seals. Participants will be introduced to pump design, hydraulics, and key aspects such as cavitation and impeller design analysis. Additionally, the course covers mechanical seals, bearings and their lubrication, as well as gas seals and dual mechanical seals. This knowledge will enable engineers and pump system specialists to ensure efficient and reliable pump operation in various industrial applications. The course helps participants develop the necessary skills to optimize performance and ensure the safety of pump systems.

Who it is for and how it helps

The course is intended for engineers, technical specialists, and managers interested in pump systems and mechanical seals, providing the essential knowledge and skills for effective operation and maintenance.

What you will learn

- Understand the principles of centrifugal pumps: Participants will learn the basic concepts and hydraulic aspects related to pumps, as well as methods to combat cavitation and ensure system stability
- Effectively maintain and repair pump systems: They will acquire skills in the maintenance and repair of pumps and mechanical seals, helping to maintain equipment reliability and longevity
- Apply knowledge in practice: Participants will be able to apply the acquired knowledge and skills in the design, operation, and management of pump systems
- Optimize performance and safety: They will be able to optimize pump operation for maximum performance and ensure the safety of operations in pump systems

Curriculum

Modules 01–03

01 Fundamentals of Centrifugal Pumps

- Definition of the basic design of a centrifugal pump and its hydraulics
- Cavitation: classic concepts, recirculation, and net positive suction head (NPSH)
- Concepts of acceptable and preferred pump operating regions, including minimum flow
- Impeller design analysis and its impact on performance
- Interaction between the pump and the system

02 Mechanical Seals

- Types of bearings used in pumps and lubrication methods
- Operation and principle of mechanical seals
- Limitations of single mechanical seals

03 Gas and Dual Mechanical Seals

- Advantages of flexible mechanical stator seals
- Operation and application of dual mechanical seals
- Fundamentals of gas seals and their application in pumps

Participation and contacts

Joining the programme

Contact the Academy and quote course code 000601 to confirm dates, delivery format, prices and enrolment terms.

Training for your team

Tell us your business goals, the roles and number of participants, and your preferred dates and location. This will help us discuss the right training option.

Preparing for the programme

The published programme does not specify any prerequisites. Contact us before enrolling to confirm how to prepare.

Discuss your training needs

mail@tecedu.org
www.tecedu.academy

Learn from the Best in the Business!